Rheology of High Solid Coatings. I. Analysis of Sagging and Slumping*

SOUHENG WU, *E. I. duPont de Nemours & Company, Central Research and Development Department, Experimental Station, Wilmington, Delaware 19898*

Synopsis

The rheology of sagging and slumping of high solid coatings on vertical surfaces is analyzed in terms of a non-Newtonian power-law model. The results indicate that, in order to have good sag control and good sprayability at the same time, high solid coatings should be pseudoplastics with a power constant of about 0.6 and a viscosity at 1 sec^{-1} of about 25 poise at the temperature of interest. This theoretical prediction is confirmed experimentally.

INTRODUCTION

Control of sagging and slumping is a critical task in the development of high solid coatings (70%–80% solids), which are a currently favored approach to low-pollution and low-energy coatings. Low-viscosity oligomers are usually used as film-forming ingredients to achieve the 70%–80% solids as compared with 20%–35% solids in conventional coatings. As a result, high solid coatings tend to sag and slump severely on vertical and slanted surfaces during application. If baking is required for curing, elevated temperatures will further aggravate the problem, when the viscosity of the oligomers drops sharply as the temperature increases. For a typical oligomer with a molecular weight of 3000, the viscosity will decrease by a decade for every 50°C increase in the temperature, as shown in Figure 1.

Furthermore, high solid coatings lose very little solvent during the spray application: typically 70%–80% solids at the spray gun and 75%–85% solids on the substrate, in contrast to conventional coatings (composed of high-molecular-weight resins) which are typically 20%–35% solids at the spray gun and 75%–95% solids on the substrate before curing, as summarized in Table I. Thus, the viscosity increase during the spray application of high solid coatings is negligible, whereas that for conventional coatings is extremely great.

The rheology of sagging and slumping of Newtonian fluids on vertical surfaces has been analyzed by Patton[1] and Fredrickson.[2] However, Newtonian fluids are known to be generally useless as high solid coatings, since adequate application properties cannot be achieved, i.e., good sag control and good sprayability or brushability cannot be obtained at the same time. Any commercially acceptable high solid coatings should thus have non-Newtonian rheology. Practical experiences show that non-Newtonian fluids sag and slump quite differently from Newtonian fluids. Yet, no theoretical and experimental analyses of the sagging and slumping of non-Newtonian fluids have been reported.

* Contribution No. 2495 from the Central Research and Development Department, E. I. duPont de Nemours and Company, Wilmington, Delaware 19898.

Journal of Applied Polymer Science, Vol. 22, 2769–2782 (1978)
© 1978 John Wiley & Sons, Inc.
0021-8995/78/0022-2769$01.00

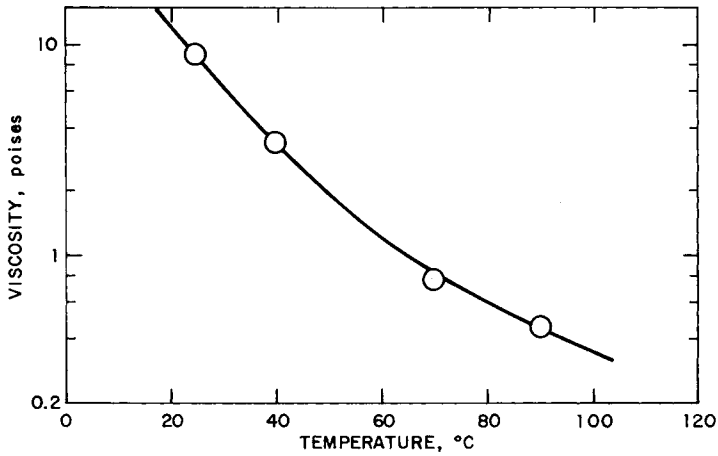

Fig. 1. Newtonian viscosity vs temperature for an oligomeric resin (M_W = 3250, M_n = 1750) at 86% solid by weight in methyl ethyl ketone solvent.

This paper will analyze the rheology of sagging and slumping of high solid coatings in terms of non-Newtonian power-law model. The results will be used to establish how to achieve both good sag control and good sprayability at the same time for high solid coatings. The theoretical predictions will be confirmed experimentally.

RHEOLOGY OF SAGGING AND SLUMPING

Consider the isothermal flow of a coating of uniform thickness and constant composition (i.e., no solvent loss and no chemical change) on a flat substrate positioned vertically in the gravity field, as shown in Figure 2. The substrate is sufficiently large so that edge effects are negligible. The axis perpendicular to the substrate (i.e., the thickness direction) is taken as the x axis. On the substrate surface, $x = 0$; on the coating surface, $x = h$, where h is the thickness of the coating.

Consider a thin layer of coating at x and having a thickness dx, width W, and length L. The gravitational force pulling downward on the thin layer is $f_g = LW\rho g(h - x)dx$, where ρ is the coating density and g is the gravitational acceleration. The viscous force retarding the downward flow is $f_v = LW\,\eta\,(dv/dx)$, where η is the coating viscosity and v is the linear velocity of the downward flow of the thin layer. At steady state, $f_g = f_v$. Therefore, we have

$$\gamma = dv/dx = (\rho g/\eta)(h - x) \tag{1}$$

TABLE I
Typical Solid-Solvent Compositions and Viscosities of High Solid Coatings and Conventional Coatings

	High solid coatings		Conventional coatings	
	At spray gun	On substrate	At spray gun	On substrate
Solids, %	70–80	75–85	20–35	75–95
Solvents, %	20–30	15–25	65–80	5–25
Viscosity, poises at 25°C	1–2.5	(1–2.5)	0.2–0.5	5000–100,000

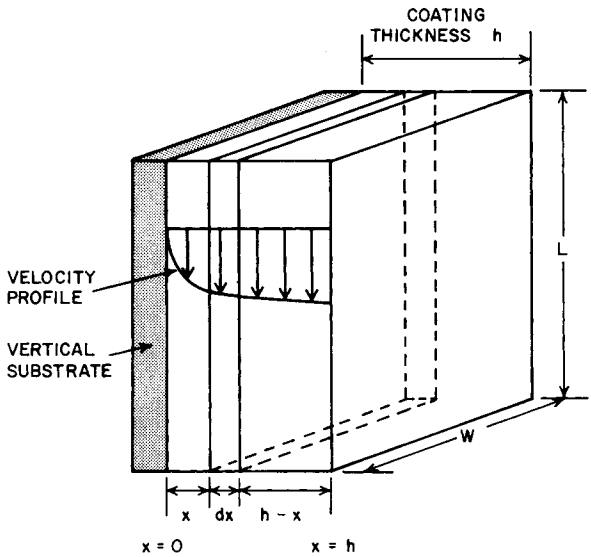

Fig. 2. Model for analyzing the rheology of sagging and slumping.

where γ is the shear rate. Assume that no slippage occurs at the substrate surface. Then, from eq. (1), we have

$$v = \int_0^x \frac{\rho g}{\eta} (h - x)\, dx \tag{2}$$

The volumetric sag rate (i.e., the volume of the coating which sags across the cross section of the film per unit time) is given by

$$\frac{dV}{dt} = \int_0^h \frac{W\rho g}{\eta} (h - x)^2\, dx \tag{3}$$

where V is the volume of the coating which sags across the cross section of the film in time t.

Equations (1)–(3) are general expressions regardless of the viscosity functions of the fluids. For Newtonian fluids, the viscosity is independent of the shear rate, and eqs. (2) and (3) can readily be integrated, as has been done before.[1,2] For non-Newtonian fluids, however, the viscosity varies with the shear rate. Thus, the viscosity must be known as a function of the shear rate in order to integrate eqs. (2) and (3). We will next transform eqs. (1)–(3) explicitly for non-Newtonian power-law fluids. As can be seen later, this model adequately represent the rheology of some high solid coatings.

Power-Law Fluids With Yield Stress

The shear stress and shear rate relation for power-law fluids with yields stress is given by[3]

$$\tau = \tau_0 + \eta_0 \gamma^n \tag{4}$$

where τ is the shear stress, τ_0 is the yield stress, η_0 a constant (named a viscosity constant), and n is also a constant (named a power constant). If the gravitational stress is equal to or smaller than the yield stress, i.e.,

$$h\rho g \leqq \tau_0 \quad \text{or} \quad h \leqq \tau_0/\rho g \tag{5}$$

then no sagging or slumping will occur. Otherwise, a layer of thickness h_0 on the coating surface will slump as a sheet, as shown in Figure 3, whereas the rest of the coating will sag. The slump thickness h_0 is given by

$$h_0 = \tau_0/\rho g \tag{6}$$

Sagging will occur between $x = 0$ and h_0. The viscosity as a function of shear rate is, from eq. (4), given by

$$\eta = \tau/\gamma = (1/\gamma)(\tau_0 + \eta_0\gamma^n) \tag{7}$$

Applying eq. (7) in eqs. (1)–(3) gives

$$\gamma = (\rho g/\eta_0)^{1/n}[h - (\tau_0/\rho g) - x]^{1/n} \tag{8}$$

$$v = (\rho g/\eta_0)^{1/n}[n/(n+1)]\{[h - (\tau_0/\rho g)]^{(n+1)/n} - [h - (\tau_0/\rho g) - x]^{(n+1)/n}\} \tag{9}$$

The maximum sag velocity occurs in a layer within $\tau_0/\rho g$ of the coating surface, and is given by

$$v_{\max} = (\rho g/\eta_0)^{1/n}[n/(n+1)][h - (\tau_0/\rho g)]^{(n+1)/n} \tag{10}$$

We will define here that the distance traveled by an element on the coating surface in time period t will be called the sag length s_0. We have found that the sag length is the primary quantity affecting the visual defects on the coating caused by sagging. The sag length is, from eq. (10), given by

$$s_0 = v_{\max}\, t = t(\rho g/\eta_0)^{1/n}[n/(n+1)][h - (\tau_0/\rho g)]^{(n+1)/n} \tag{11}$$

The volumetric sag rate is given by

$$\frac{dV}{dt} = W\left(\frac{\rho g}{\eta_0}\right)^{1/n}\left(h - \frac{\tau_0}{\rho g}\right)^{(n+1)/n}\left[\frac{n}{2n+1}\left(h - \frac{\tau_0}{\rho g}\right) + \frac{n}{n+1}\left(\frac{\tau_0}{\rho g}\right)\right] \tag{12}$$

Power-Law Fluids Without Yield Stress

The relevant equations for power-law fluids without yield stress can be obtained by letting $\tau_0 = 0$ in eqs. (4)–(12); i.e.,

$$\tau = \eta_0\gamma^n \tag{13}$$

$$\gamma = (\rho g/\eta_0)^{1/n}(h - x)^{1/n} \tag{14}$$

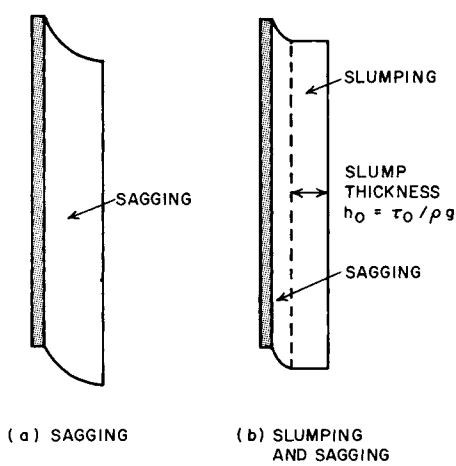

Fig. 3. Schematics of sagging and slumping.

$$v = (\rho g/\eta_0)^{1/n}[n/(n+1)](h^{(n+1)/n} - (h-x)^{(n+1)/n}) \tag{15}$$

$$s_0 = t(\rho g/\eta_0)^{1/n}[n/(n+1)]h^{(n+1)/n} \tag{16}$$

$$\frac{dV}{dt} = W\left(\frac{n}{n+2}\right)\left(\frac{\rho g}{\eta_0}\right)^{1/n} h^{(2n+1)/n} \tag{17}$$

Bingham Fluids

The relevant equations for Bingham fluids can readily obtained by letting $n = 1$ in eqs. (4)–(12), i.e.,

$$\tau = \tau_0 + \eta_0\gamma \tag{18}$$

$$\gamma = (\rho g/\eta_0)[h - (\tau_0/\rho g) - x] \tag{19}$$

$$v = (\rho g/2\eta_0)\{[h - (\tau_0/\rho g)]^2 - [h - (\tau_0/\rho g) - x]^2\} \tag{20}$$

$$s_0 = t(\rho g/2\eta_0)[h - (\tau_0/\rho g)]^2 \tag{21}$$

$$\frac{dV}{dt} = \frac{W}{3}\frac{\rho g}{\eta_0}\left(h - \frac{\tau_0}{\rho g}\right)^2\left(h + \frac{\tau_0}{2\rho g}\right) \tag{22}$$

Newtonian Fluids

The relevant equations for Newtonian fluids can readily be obtained by letting $\tau_0 = 0$ in eqs. (18)–(22), i.e.,

$$\tau = \eta_0\gamma \tag{23}$$

$$\gamma = (\rho g/\eta_0)(h - x) \tag{24}$$

$$v = (\rho g/2\eta_0)[h^2 - (h-x)^2] \tag{25}$$

$$s_0 = t(\rho g/2\eta_0)h^2 \tag{26}$$

$$dV/dt = (W/3)(\rho g/\eta_0)h^3 \tag{27}$$

Note that eqs. (23)–(27) are identical to those given by Patton[1] and Fredrickson.[2]

APPLICATIONS

The equations obtained above will be used to establish the rheological requirements for the control of sagging and slumping in high solid coatings.

Criterion for Acceptable Sagging

We have found experimentally that when the sag length is greater than about 0.05–0.1 cm, unsightly V-shaped depressions will appear around dust particles and other solid contaminants on the coating surface. These contaminants are usually unavoidable, but are invisible in the absence of sagging. When the sag length is greater than, say, 0.1 cm, these defects are magnified and brought into sight. The resulting coatings are thus unacceptable.

On the other hand, when the sag length is greater than about 0.5–1.0 cm, the

coating will drip and the coating thickness will become nonuniform: the upper portions thin out and the lower portions thickens. In severe cases, the coating will be depleted on the upper portions of the substrate. Based on these observations, we propose that the sag length must be smaller than about 0.1 cm to be acceptable.

Application of Newtonian Fluids

Figure 4 shows that the shear rate increases linearly from zero on the coating surface to the maximum value of $\rho gh/\eta_0$ on the substrate surface; the sag velocity increases parabolically from zero on the substrate surface to the maximum value of $\rho gh^2/2\eta_0$ on the coating surface.

Typically, the time period t in which a high solid coating is fluid enough to sag before immobilization by curing is about 10 min; the coating density about 1 g/cm^3. Figure 5 shows the relations between sag length and coating viscosity at various coating thicknesses, as calculated by eq. (26). Thus, for a 2 mil coating to be practically free from sagging, the coating viscosity must be greater than about 100 poises at the prevailing temperature.

The shear rate of sagging can be expressed in terms of the sag length. From eqs. (24) and (26), we have

$$\gamma = (2s_0/t)[(h - x)/h^2] \tag{28}$$

which is plotted in Figure 6 for h = 2 mils and t = 10 min. The maximum shear rates in sagging are very low, in the range of 0.1 to 0.001 sec^{-1} for sag length of 0.5 to 0.0005 cm.

Application to Bingham Fluids

If the yield stress is sufficiently great, satisfying eq. (5), no sagging or slumping will occur. The minimum yield stress required for no sagging is

$$\tau_{0(\min)} = \rho gh \tag{29}$$

which is plotted in Figure 7, in which the coating density is taken to be 1 g/cm^3. For a 2 mil coating of density 1 g/cm^3, the minimum yield stress for no sagging is thus about 5 dyn/cm^2.

Slumping and sagging will occur if the yield stress is smaller than $\tau_{0(\min)}$. Figure 8 shows that the shear rate is zero within $\tau_0/\rho g$ of the coating surface, and

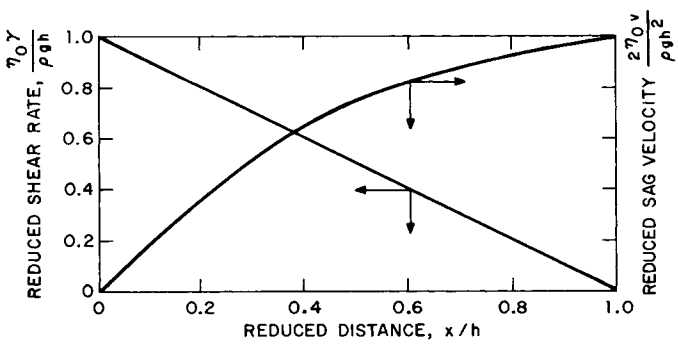

Fig. 4. Reduced shear rate and reduced sag velocity for Newtonian fluids.

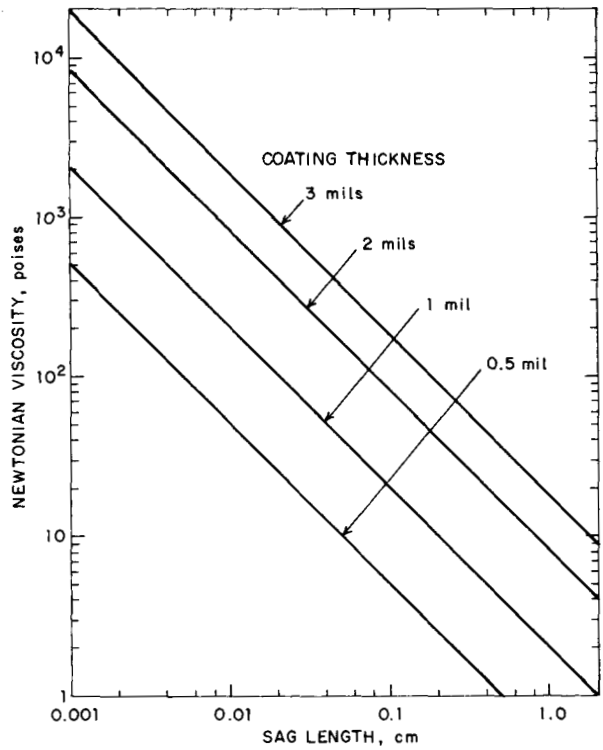

Fig. 5. Sag length vs coating thickness and coating viscosity for Newtonian fluids, assuming coating density 1.0 g/cm^3 and sag time 10 min.

increases linearly to the maximum value of $(\rho g/\eta_0)[h - (\tau_0/\rho g)]$ on the substrate surface. The sag velocity is zero on the substrate surface and increases parabolically to the maximum value of $(\rho g/2\eta_0)[h - (\tau_0/\rho g)]^2$ within a thickness of $\tau_0/\rho g$ from the coating surface.

Application to Pseudoplastic Fluids

We consider the case $n < 1$ and $\tau_0 = 0$, i.e., pseudoplastic fluids without yield stress. From eqs. (14)–(16) and (24)–(26), it is apparent that pseudoplastic fluids will sag less than Newtonian fluids, both of the same η_0. For numerical illustration, consider the special case of n = 0.5. The relevant equations become

$$\gamma = (\rho g/\eta_0)^2(h - x)^2 \tag{30}$$

$$v = (1/3)(\rho g/\eta_0)^2[h^3 - (h - x)^3] \tag{31}$$

$$s_0 = (t/3)(\rho g/\eta_0)^2 h^3 \tag{32}$$

Figure 9 plots eq. (32) for $\rho = 1$ g/cm^3 and t = 10 min. For sagging to be imperceptible, i.e., $s_0 \leqq 0.1$, a 2 mil coating must have a viscosity greater than about 20 poises at a shear rate of 1 sec^{-1}, as compared with about 100 poises for a Newtonian fluids under corresponding conditions.

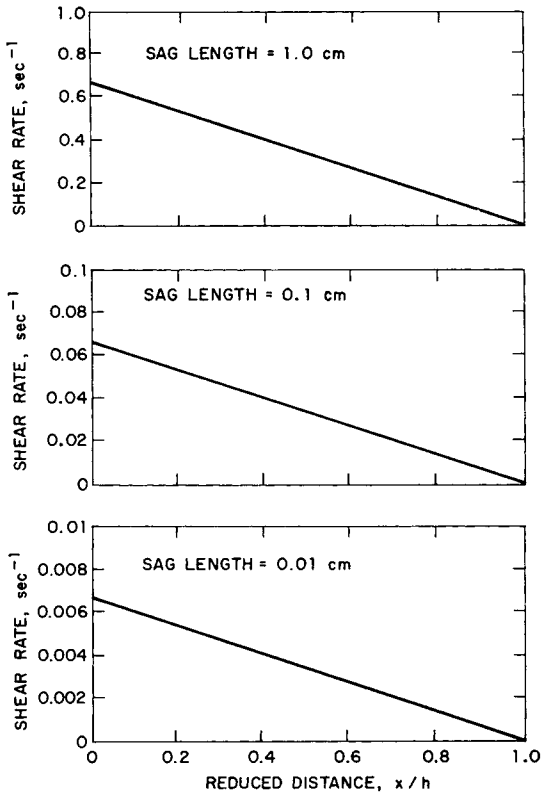

Fig. 6. Shear rate during sagging for Newtonian fluids, assuming 2 mil coating thickness, 1.0 g/cm^3 coating density and 10 min sag time.

Application of Dilatant Fluids

We consider the case $n > 1$ and $\tau_0 = 0$, i.e., dilatant fluids without yield stress. From eqs. (14)–(16) and (24)–(26), it is apparent that dilatant fluids will sag more severely than Newtonian fluids, both of the same η_0. For numerical illustration, consider the special case of $n = 2$. The relevant equations become

$$\gamma = (\rho g/\eta_0)^{1/2}(h - x)^{1/2} \tag{33}$$

$$v = (2/3)(\rho g/\eta_0)^{1/2}[h^{3/2} - (h - x)^{3/2}] \tag{34}$$

$$s_0 = (2t/3)(\rho g/\eta_0)^{1/2}h^{3/2} \tag{35}$$

Figure 10 plots eq. (35) for $\rho = 1$ g/cm^3 and t = 10 min. For sagging to be imperceptible, i.e., $s_0 \leqq 0.1$, a 2 mil coating must have a viscosity greater than about 2000 poises at a shear rate of 1 sec^{-1}, as compared with about 100 poises for Newtonian fluids and about 20 poises for pseudoplastic fluids under corresponding conditions.

DISCUSSIONS

Table II summarizes the minimum rheological requirements for nonsagging on vertical surfaces for 2 mil coatings of 1 g/cm^3 density and sag time 10 min. For the same value of the viscosity constant, the tendency to sagging increases in the order: pseudoplastic fluids, Bingham fluids, Newtonian fluids, and dilatant fluids.

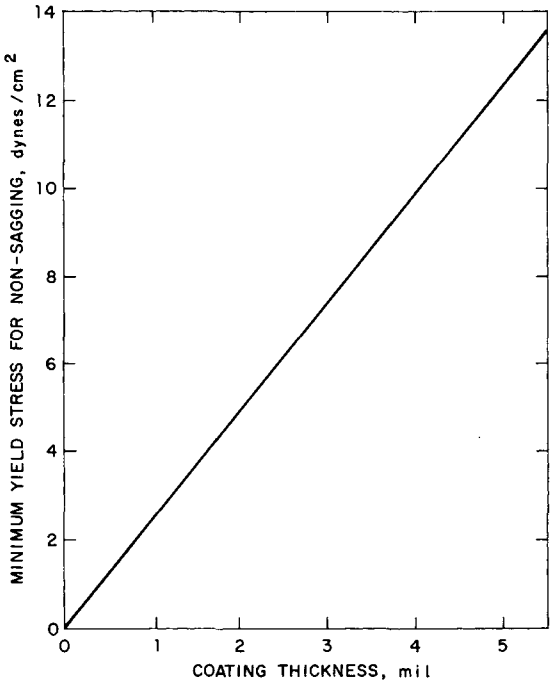

Fig. 7. Minimum yield stress required for nonsagging assuming 1.0 g/cm^3 coating density.

In order to be suitable for spray application, the viscosity of a coating should be about 0.25–2.5 poises at the spray shear rate of about 2500 sec^{-1}. Take the spray viscosity to be 1 poise at 2500 sec^{-1}, the viscosity constant for sprayable coatings must be

$$\eta_0 = (2500)^{1-n} \text{ poises} \tag{36}$$

where η_0 is the viscosity constant, or the viscosity at 1 sec^{-1} shear rate. Combining eq. (36) with eq. (16) gives the sag length of sprayable coatings as

$$s_0 = t(980)^{1/n}(2500)^{(n-1)/n}[n/(n+1)]h^{(n+1)/n} \tag{37}$$

Figure 11 plots eq. (37) for t = 10 min and ρ = 1 g/cm^3. It can be seen that only the pseudoplastic fluid with n = 0.6 or less can have both good sag control and good sprayability at the same time.

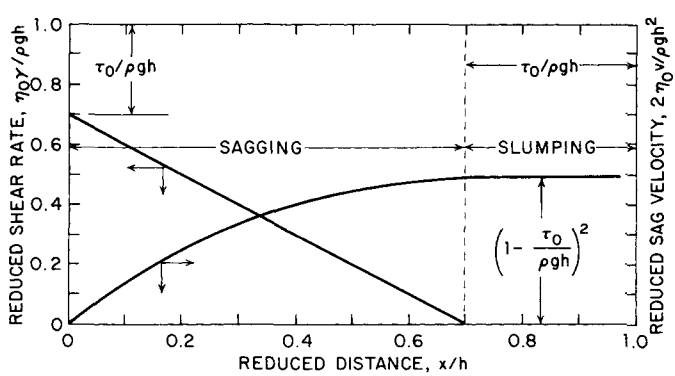

Fig. 8. Schematics of shear rate and sag velocity for Bingham (plastic) fluids.

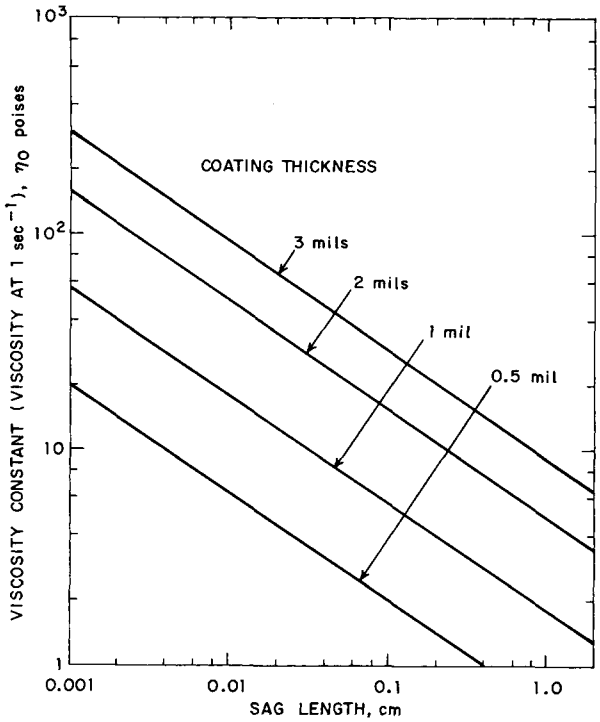

Fig. 9. Sag length vs coating thickness and viscosity constant η_0 (i.e., the viscosity at 1 sec^{-1} shear rate) for a pseudoplastic fluids of $n = 0.5$, assuming 1.0 g/cm^3 coating density and 10 min sag time.

COMPARISON WITH EXPERIMENTS

The above analysis explicitly provides guidelines for designing sag-free sprayable high solid coatings. We will show below that these theoretical results are consistent with experiments.

TABLE II
Summary of Rheological Requirements for Nonsagging on Vertical Surface for a 2-mil Coating[a]

	Minimum viscosity (in poises at 1 sec^{-1}) required for sag length less than the following for a 2 mil coating			
	0.001 cm	0.01 cm	0.1 cm	1.0 cm
Newtonian fluid $n = 1, \tau_0 = 0$	7,600	760	76	7.6
pseudoplastic fluid special case of $n = 0.5, \tau_0 = 0$	160	50	16	5
Dilatant fluid special case of $n = 2, \tau_0 = 0$	2×10^7	2×10^5	2000	20
Bingham fluid $n = 1, \tau_0 \neq 0$	The minimum yield stress required for nonsagging and nonslumping is $\tau_0 = 5$ dyn/cm^2.			

[a] Sag time assumed to be 10 min. Constant thickness, temperature, and compositions (no solvent loss and no chemical changes) are also assumed.

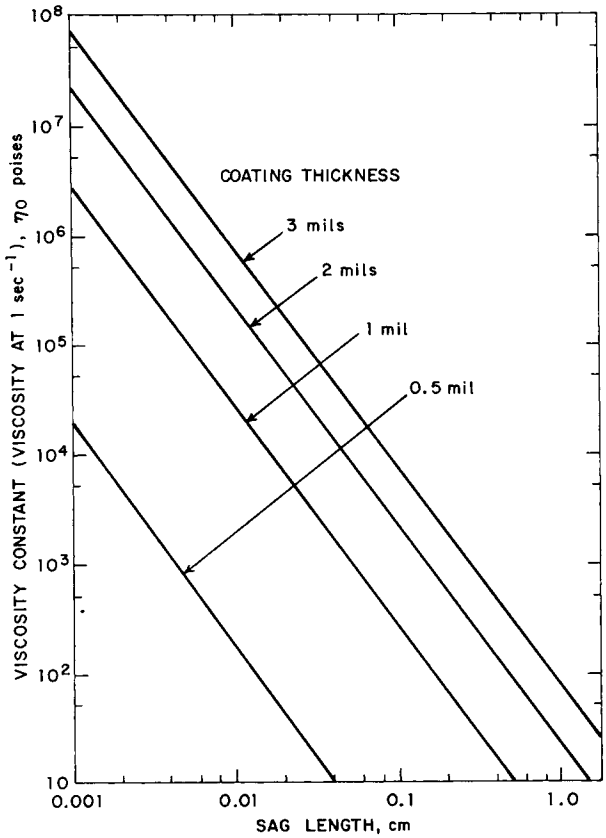

Fig. 10. Sag length vs coating thickness and viscosity constant for a dilutant fluid of $n = 2$, assuming 1.0 g/cm^3 coating density and 10 min sag time.

Materials

Three sprayable high solid coatings are used, as listed in Table III. Figure 12 shows that their viscosities conform to the power-law equations with $n = 1.0$, 0.75, and 0.50, respectively, within the experimental shear rates of 0.1 to 1000 sec^{-1}. These viscosities are measured at 25°C with a ROTOVISCO V3 rotational viscometer (Haake, Inc., 244 Saddle River Rd., Saddle Brook, N. J. 07662). Measurements below 0.1 sec^{-1} are not feasible with this viscometer. We will assume that the power-law equation is obeyed below 0.1 sec^{-1}, although we have no experimental data to confirm this. All three samples have no detectable yield stress, i.e., any yield stresses present are below 0.015 dyn/cm^2.

A portion of each sample is pigmented with a blue copper phthalocyanine pigment (5% by weight) dispersed with an ultrasonic mill. The pigmentation does not affect their rheological properties. These pigmented portions are to be used as "indicators" for the measurements of sag length, as will be described below.

Sag Experiments

None of the existing methods[1] for the measurement of sag length are adequately accurate for our purpose. Therefore, we devised a new "indicator" method: a drop of blue-pigmented sample is first placed near an edge of a 4 in.

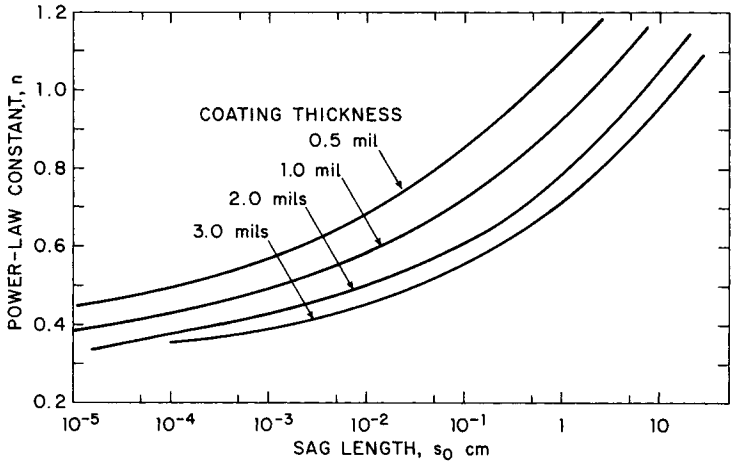

Fig. 11. Sag length vs power constant at various coating thicknesses for sprayable high solid coatings. The conditions assumed are viscosity 1 poise at the spray shear rate of 2500 sec^{-1}, coating density 1 g/cm^3, sag time 10 min, constant temperature, and constant composition.

× 12 in. smooth aluminum panel about halfway along the length of the panel. The clear sample is then drawn down width-wise from the edge where the blue drop is located to the other edge by using a doctor blade to form a coating of uniform thickness. During the draw down, the blue drop is smeared out to form an indicator band. The shape and size of this indicator band does not change detectably in 10 min if the panel is left positioned horizontally.

The film thickness is measured gravimetrically. The panel is then positioned vertically for 10 min for the coating to sag. Photographs of the panel with the blue indicator band are taken before and after the 10 min period. As the coating sags, the blue indicator band flows down. The distance traveled by the front of the blue band is the sag length, and can be measured accurately. The temperature is kept at 25°C during the sag experiments.

TABLE III
Rheological Characteristics of Three Experimental High Solid Coatings and Their Experimental Sag Data at 25°C

Code	Characteristics	n	η_0, poise	η at 2500 sec^{-1} poise	ρ g/cm^3	h mil expt.	s_0 cm Expt.
N-3	Newtonian	1.0	0.95	0.95	1.119	0.63	0.52
						0.85	1.55
						1.15	2.50
						1.45	4.00
P-2	Pseudoplastic	0.75	7.2	1.02	1.117	1.22	0.24
						1.85	0.81
						2.45	1.30
						3.32	2.70
P-4	Pseudoplastic	0.50	50	1.00	1.123	4.50	0.18
						6.50	0.35
						8.23	0.89

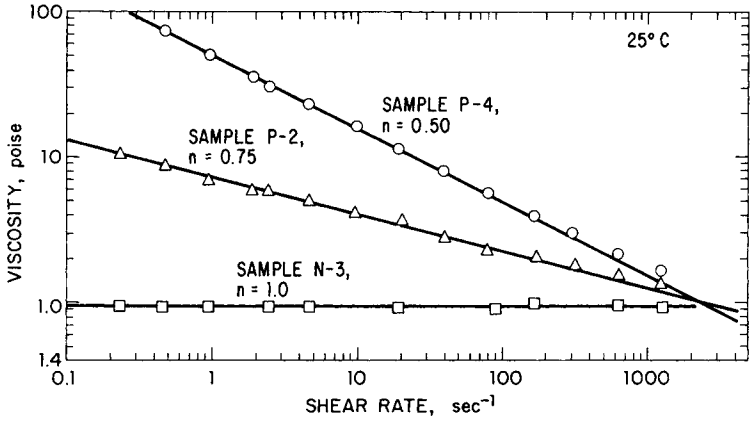

Fig. 12. Experimental viscosity vs shear rate plots for three sprayable high solid coatings at 25°C.

Results

The results of sag measurements are given in Table III and plotted in Figure 13. The solid lines are drawn to the theoretical slope of $(n + 1)/n$ for the $\log s_0$ vs $\log h$ plots. The agreement between the theory and the experiment is good.

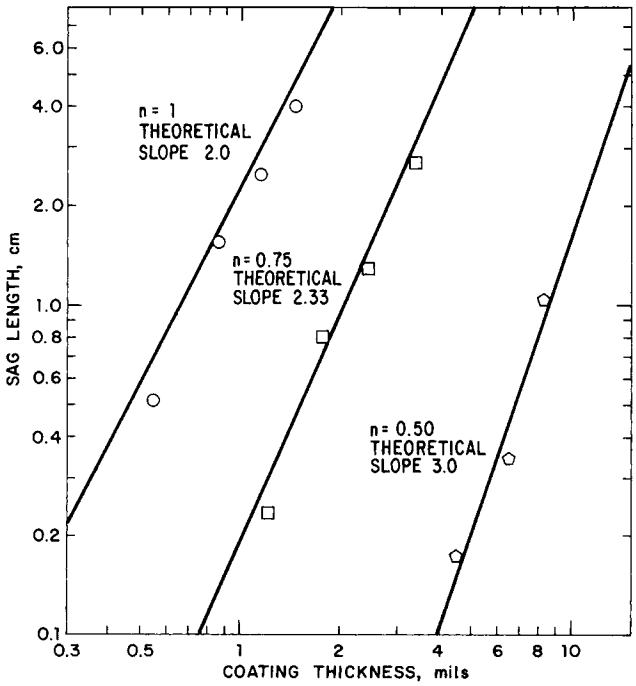

Fig. 13. Experimental sag length vs coating thickness. Points are experimental; solid lines are drawn to eq. (16).

CONCLUSIONS

The rheology of sagging and slumping of high solid coatings on vertical surfaces has been analyzed in terms of non-Newtonian power-law model. The theoretical results are confirmed experimentally. The results indicate that a high solid coating should have a pseudoplastic rheology with a power constant of about 0.6 and a viscosity constant (i.e., viscosity at 1 sec^{-1}) of about 25 poises in order to be sprayable and sag free.

References

1. T. C. Patton, *Paint Flow and Pigment Dispersion,* Interscience, New York, 1964, pp. 127–146.
2. A. G. Fredrickson, *Principles and Applications of Rheology,* Prentice-Hall, Englewood Cliffs, New Jersey, 1964, pp. 175–179.
3. C. D. Han, *Rheology in Polymer Processing,* Academic, New York, 1976.

Received May 9, 1977
Revised July 22, 1977